DWG NO. VFD-RSI-125-H2-4C

Item	Voltage / Phase	Normal Duty Rating	Normal Duty Amps	Heavy Duty Rating	Heavy Duty Amps	Weight	Heat Loss(W)	UL/IP RATING
VFD-RSI-125-H2-4C	460V / 3ϕ	125HP / 90kW	169.0A	100HP / 75kW	136.0A	94.8lb / 43kg	2775	UL OPEN / IP00

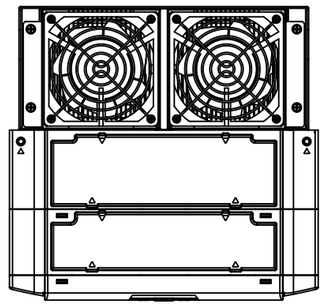

TOP VIEW

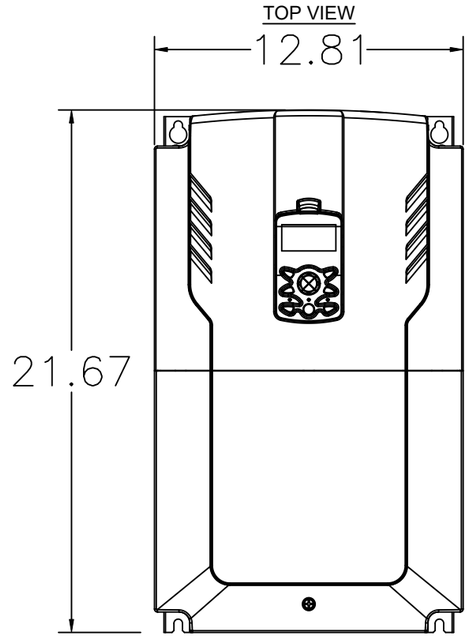

FRONT VIEW

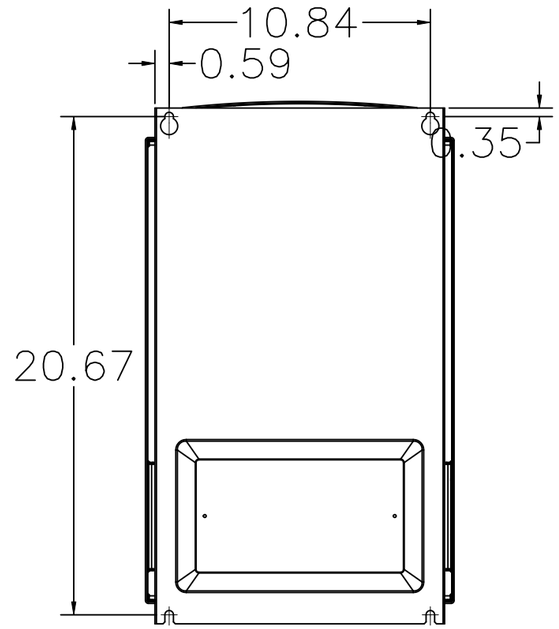

BACK VIEW

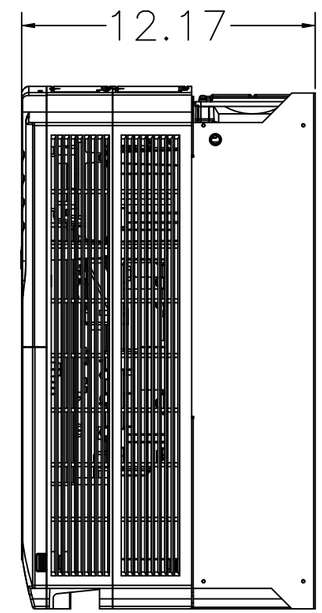

RIGHT SIDE VIEW

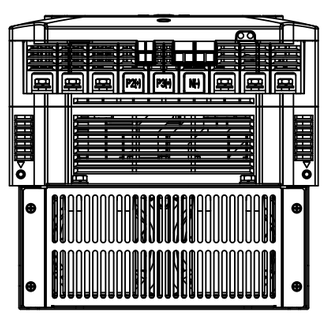

BOTTOM VIEW

NOTES:

* HD: Heavy duty type for constant torque load 150%P* ND: Normal duty type for variable torque load 120%P* Heatloss is measured with 60Hz, 100% load and default carrier frequency.
* Refer to product manual for additional details and specifications
* UL Type 1 is achieved with optional conduit box. P/N EN-101040-04

REVISIONS

DO NOT SCALE DWG

THIRD ANGLE PROJECTION

THIS DRAWING AND ALL INFORMATION CONTAINED HEREIN, IS THE PROPERTY OF BENSHAW INC., AND MAY NOT BE REPRODUCED, OR DIVULGED TO UNAUTHORIZED PERSONS WITHOUT THE EXPRESS WRITTEN CONSENT OF BENSHAW INC. IT IS PROVIDED SOLELY FOR THE CONVENIENCE OF THE USER AND SHALL BE RETURNED UPON REQUEST.

UNLESS OTHERWISE SPECIFIED
ALL DIMENSIONS IN INCHES
INTERPRET DRAWING PER ASME Y14.5M-1994
TOLERANCES: .XX ± .03
.XXX ± .015
ANGLES ± 1°
MATERIAL:
FINISH:

TITLE:

H2 SERIES VFD
125HP, 480V, 169A, ND
100HP, 480V, 136A, HD
UL OPEN (IP20)

SIGNATURES		DATE
DRWN.	RJF	04/01/20
CHKD.	DRP	11/17/20
ENG.	DRP	01-10-22
MFG.		

BENSHAW
615 ALPHA DRIVE
PITTSBURGH, PA. 15238
550 BRIGHT STREET
LISTOWEL ONTARIO
N4W 3W3

SIZE D | DWG NO. VFD-RSI-125-H2-4C | REV 0

SCALE: 1:1 | SHEET 1 OF 1