DWG NO. VFD-RSI-300-H2-4C

| Item | Voltage / Phase | Normal Duty Rating | Normal Duty Amps | Heavy Duty Rating | Heavy Duty Amps | Weight | Heat Loss(W) | UL/IP RATING |
|---|---|---|---|---|---|---|---|---|
| VFD-RSI-300-H2-4C | 460V / 3ϕ | 300HP / 185kW | 370.0A | 250HP / 160kW | 303.0A | 164.7lb / 74.7kg | 6475 | UL OPEN / IP20 |

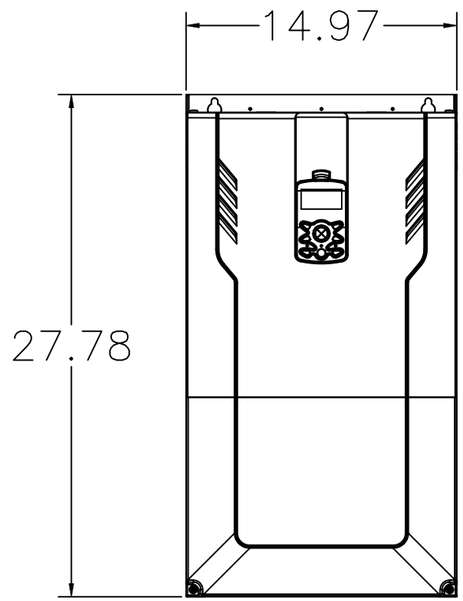


FRONT VIEW

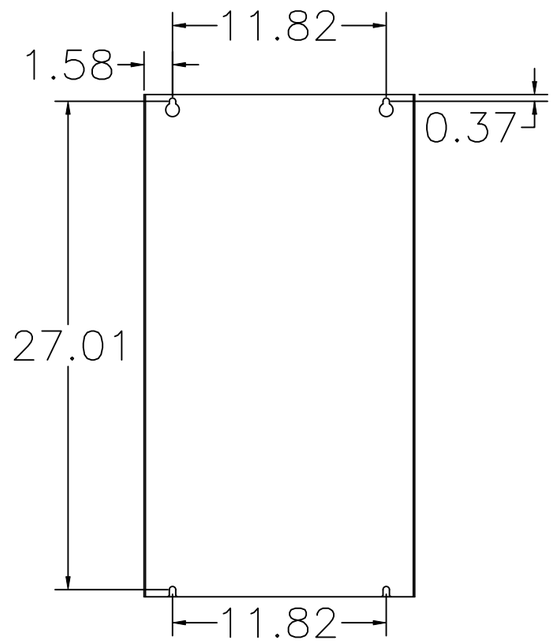


BACK VIEW

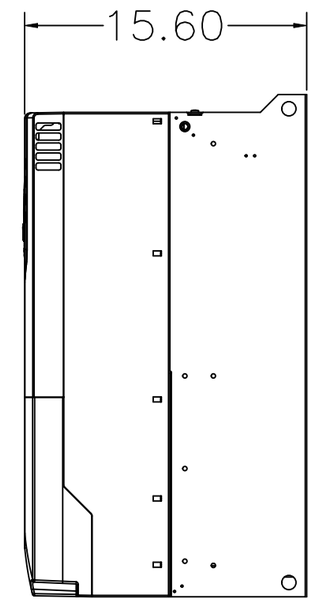


RIGHT SIDE VIEW

| HP | Input / Output Terminal Screw Size | Input / Output Screw Torque |
|---|---|---|
| 250 | M12 | 17.87 ~ 21.07 Nm<br>53 ~ 80 lbf.in |
| 300 | | |

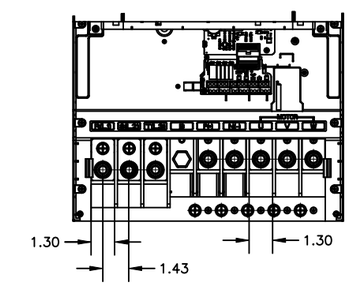


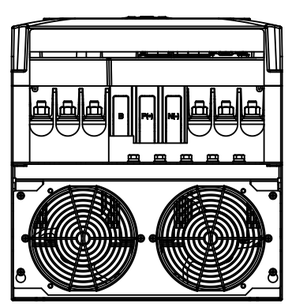

BOTTOM VIEW

NOTES:

* HD: Heavy duty type for constant torque load 150%P* ND: Normal duty type for variable torque load 110%P* Heatloss is measured with 60Hz, 100% load and default carrier frequency.
* Refer to product manual for additional details and specifications
* UL Type 1 is achieved with optional conduit box. P/N EN-101040-06

REVISIONS

DWG

DO NOT SCALE

THIRD ANGLE PROJECTION

THIS DRAWING AND ALL INFORMATION CONTAINED HEREIN, IS THE PROPERTY OF BENSHAW INC., AND MAY NOT BE REPRODUCED, OR DIVULGED TO UNAUTHORIZED PERSONS WITHOUT THE EXPRESS WRITTEN CONSENT OF BENSHAW INC. IT IS PROVIDED SOLELY FOR THE CONVENIENCE OF THE USER AND SHALL BE RETURNED UPON REQUEST.

UNLESS OTHERWISE SPECIFIED
ALL DIMENSIONS IN INCHES
INTERPRET DRAWING PER ASME Y14.5M-1994
TOLERANCES: .XX ± .03
.XXX ± .015
ANGLES ± 1°
MATERIAL:
FINISH:

TITLE:

H2 SERIES VFD
300HP, 480V, 370325A, ND
250HP, 480V, 303A, HD
UL OPEN (IP20)

| SIGNATURES | | DATE |
|---|---|---|
| DRWN. | RJF | 04/02/20 |
| CHKD. | DRP | 11/17/20 |
| ENG. | DRP | 01-10-22 |
| MFG. | | |

BENSHAW

615 ALPHA DRIVE
PITTSBURGH, PA. 15238

550 BRIGHT STREET
LISTOWEL ONTARIO
N4W 3W3

SIZE D | DWG NO. VFD-RSI-300-H2-4C | REV 0

SCALE: 1:1 | SHEET 1 OF 1